AGREEMENT

THIS AGREEMENT, made this 18th day of May, 1955, by and between the STATE OF ARIZONA, acting by and through its State Highway Engineer, thereunto duly authorized, hereinafter designated STATE, and the CITY OF CASA GRANDE, a Municipal Corporation in the County of Pinal, State of Arizona, acting by and through its Mayor, thereunto duly authorized, hereinafter designated CITY.

RECITALS:

For the safety and protection of the traveling public, it is necessary and desirable that Semi-traffic actuated Signals be installed at the intersection of State Route 84 and Sacaton Street and State Route 84 and Florence Street in the city of Casa Grande, and,

WHEREAS, the parties hereto for their mutual benefit desire to cooperate in the installation of the said traffic signals each in the manner as hereinafter stated, and,

WHEREAS, ample funds have been provided and set aside by the State in AFE 0128 to defray the State's share of the cost of the work, and,

WHEREAS, it is the desire of the parties hereto to proceed with the work and set out in writing their understandings and agreements pursuant to which the said work shall be performed, completed and paid for and subsequently maintained.

AGREEMENT:

ARTICLE I

IN CONSIDERATION of the covenants of the State herein contained and the faithful performance thereof, the City agrees:

1. To furnish all labor and equipment necessary to install in a good and workmanlike manner, in accordance with the Traffic Signal Project Book and the Standard Specifications of the Arizona Highway Department, Edition of 1948, applicable, which Traffic Signal Specifications and Standard Specifications are made a part hereof, all the electrical materials and apparatus necessary for complete and functioning traffic signals, including all necessary concrete work, excavation, backfill, pavement and sidewalk cut and replacement and painting.

2. To provide and set aside each year sufficient funds for the complete maintenance (except the control cabinets) and operation of the traffic signals, including the furnishing of electricity and the furnishing of all labor, tools and equipment necessary to replace broken or defective material and apparatus, and, when deemed necessary and upon the approval of the State, to install additional apparatus; all equipment and apparatus, whether replacements or additions, to be State furnished; maintenance to continue until such time as, by mutual agreement, it is no longer necessary or desirable.

ARTICLE II

IN CONSIDERATION of the covenants of the City herein contained and the faithful performance thereof, the State agrees:

1. To furnish and deliver as needed all electrical materials, equipment and apparatus necessary for the complete and functioning traffic signals as called for in the Traffic Signal Project Book.

2. To furnish and provide engineering inspection and service at no expense to the City.

3. To fully maintain the control cabinets.

4. To furnish and deliver replacements for broken or defective materials and apparatus and when deemed necessary, additional apparatus, as signal heads, phases and walk-wait heads.

ARTICLE III

IN CONSIDERATION of the premises it is mutually agreed:

It is specifically understood and agreed that the State is bound by this agreement to furnish and deliver certain materials and apparatus, as hereinbefore stated, and that the City, in the installation of the traffic signals and the work incidental thereto, shall use every precaution to safeguard the person and property of the traveling public and shall save harmless the State from all suits, actions or claims of any character brought on account of any injury or damage sustained in consequence of any neglect in safeguarding the work.

IN WITNESS WEREOF, the parties hereto have executed this agreement the day and year first written above.

STATE OF ARIZONA

By: GEO. E. LANG
State Highway Engineer

By C. B. BROWNING
Deputy State Engineer

City of Casa Grande

By: Mayor

ECONOLITE CORPORATION

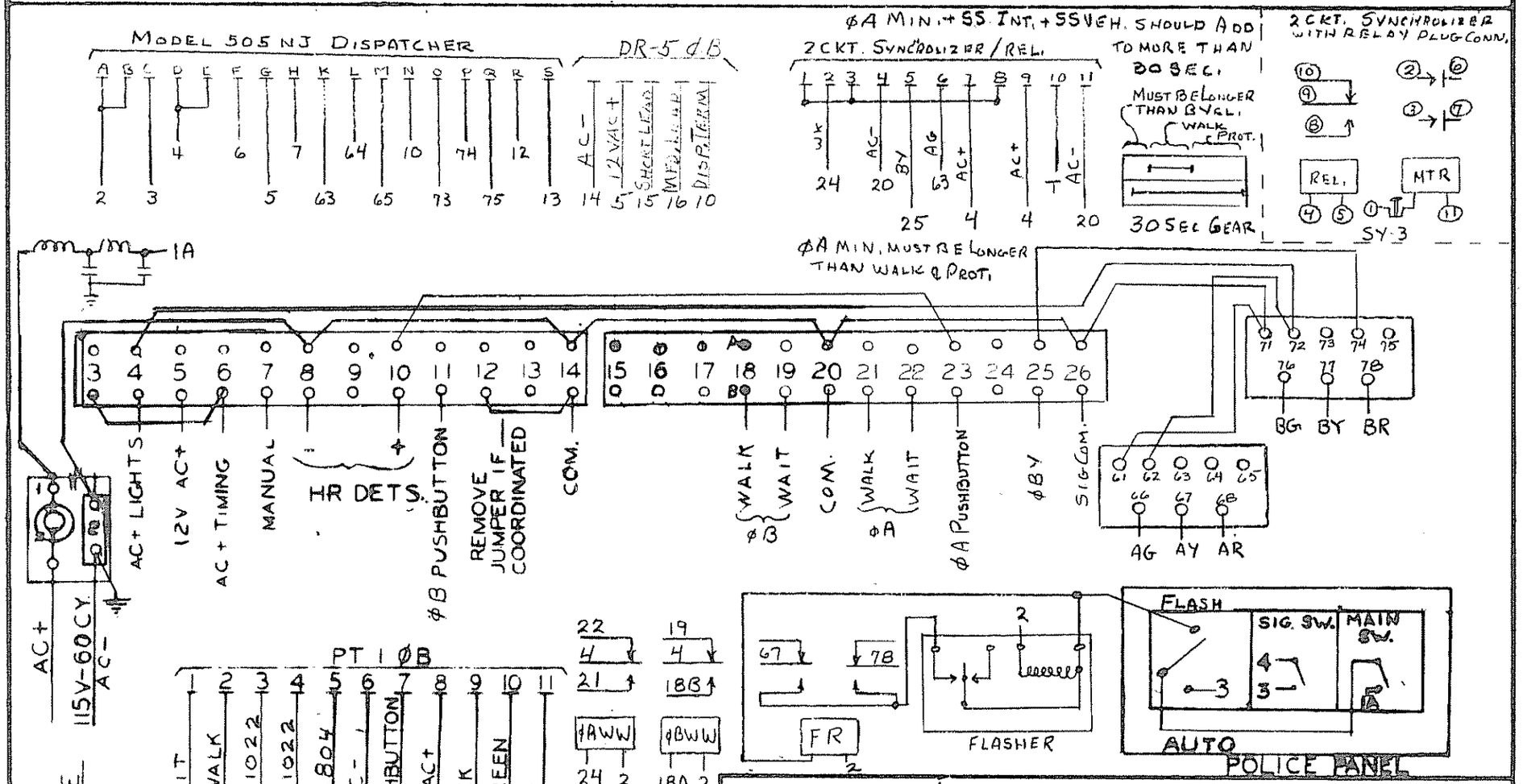

T = TAPE UP SEPARATELY

LOCATION	ARIZONA		
SCALE	APPROVED BY		DRAWN BY
DATE 5/55			SKETCH

MODEL 505NJ, DISPATCHER IN L. BOX, FLASHER, FLASH RELAY
R.I.S. , PT 1, WALK-WAIT RELAY, ØB DR-5 2 CKT SYN/REL, WW ØA

INSTALLED BY ARIZONA HIGHWAY DEPT

DRAWING NUMBER BTE-5330

SO 494-E

ECONOLITE CORPORATION

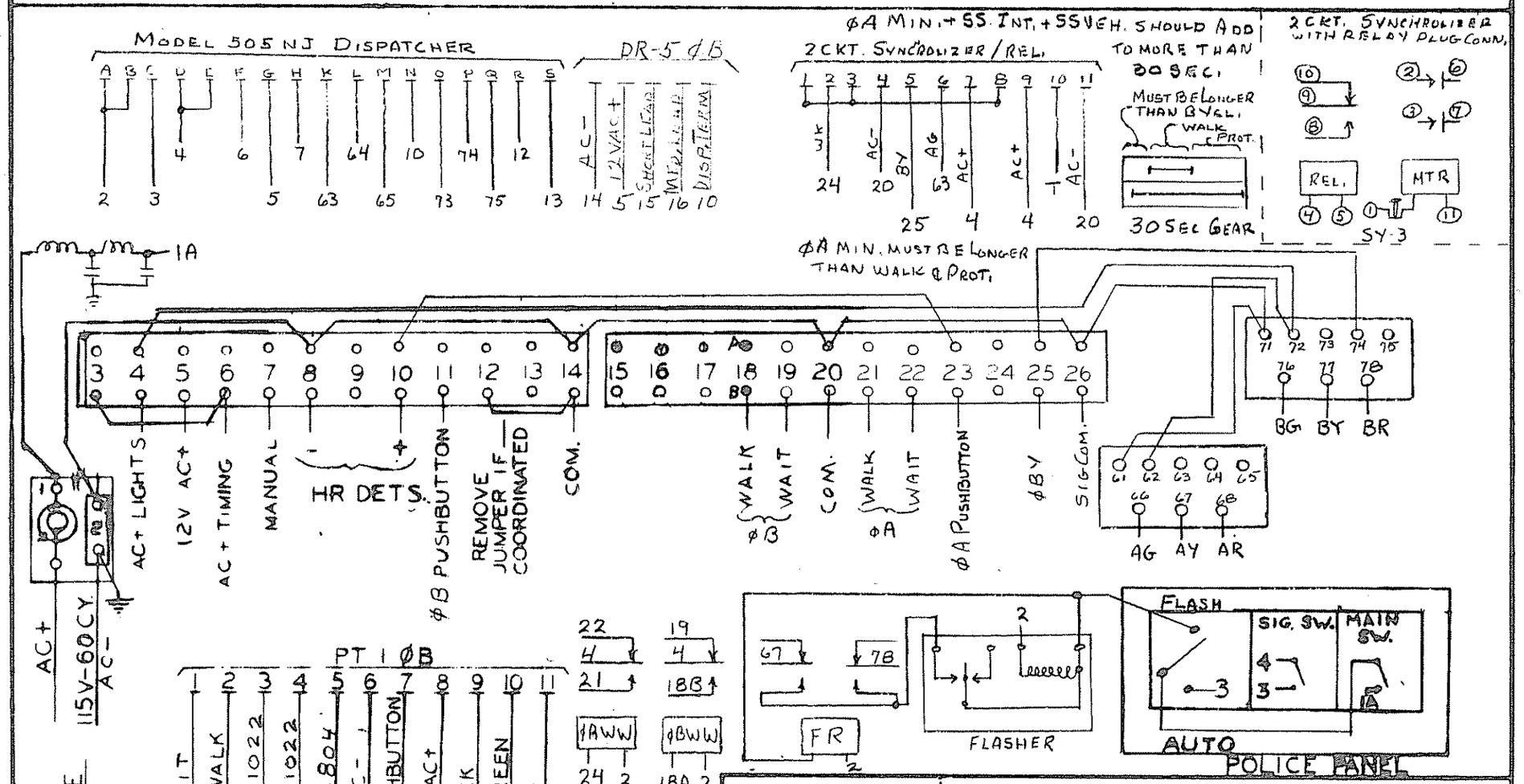

LOCATION: ARIZONA

SCALE

DATE: 5/55

APPROVED BY

DRAWN BY

SKETCH

MODEL 505NJ, DISPATCHER IN L. BOX, FLASHER, FLASH RELAY R.I.S. , PT 1, WALK-WAIT RELAY, ØB DR-5 2 CKT SYN./REL, WW ØA

INSTALLED BY: ARIZONA HIGHWAY DEPT

DRAWING NUMBER: BTE-5330

SO 494-6

ECONOLITE CORPORATION

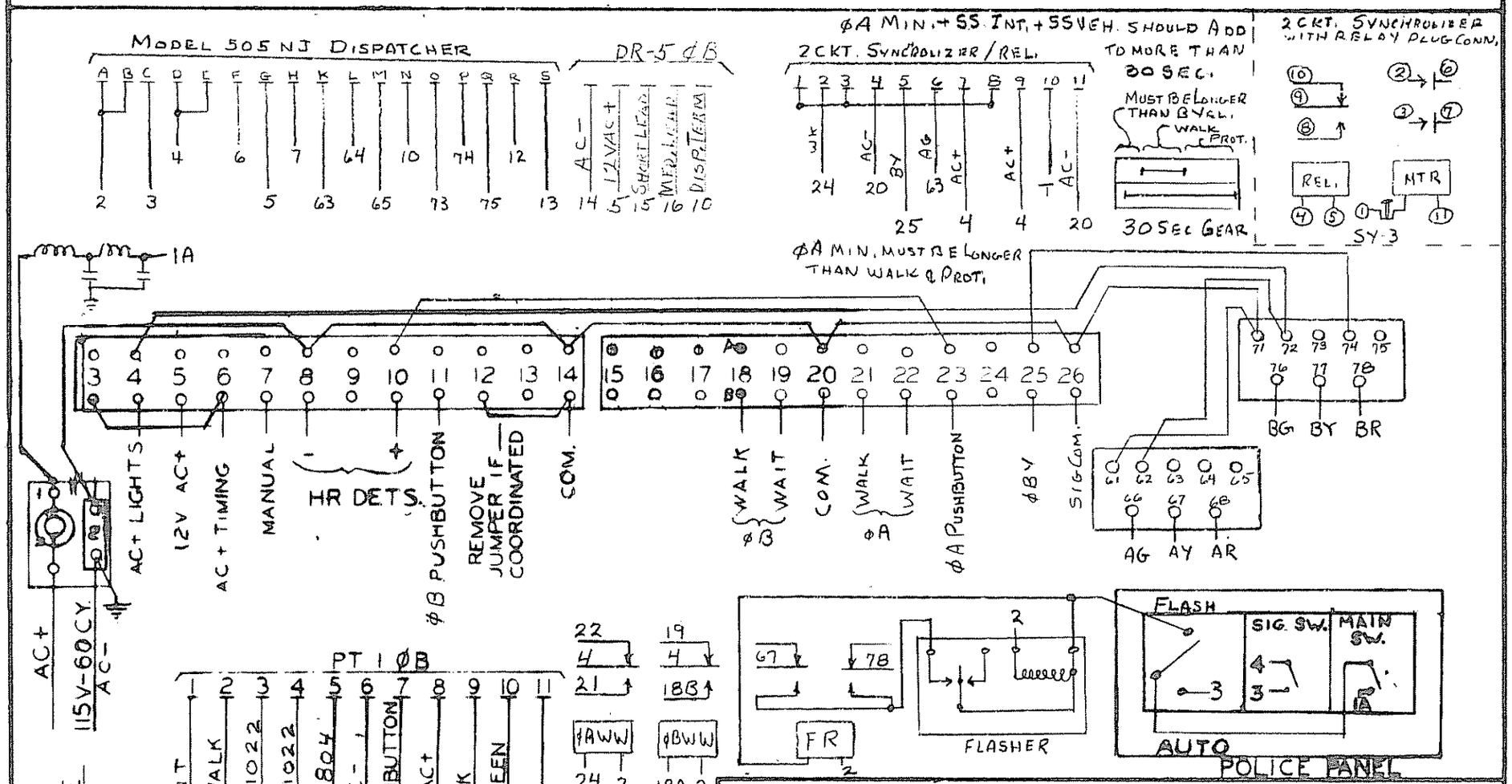

T = TAPE UP SEPARATELY

LOCATION	ARIZONA		
SCALE	APPROVED BY		DRAWN BY
DATE 5/55			SKETCH

MODEL 505NJ, DISPATCHER IN L BOX, FLASHER, FLASH RELAY
RIS. , PT 1, WALK-WAIT RELAY, ØB DR-5 2 CKT SYN/REL, WW ØA

INSTALLED BY ARIZONA HIGHWAY DEPT	DRAWING NUMBER BTE-5330

SO 494-6

AUTOMATIC SIGNAL DIVISION
EASTERN INDUSTRIES, INCORPORATED

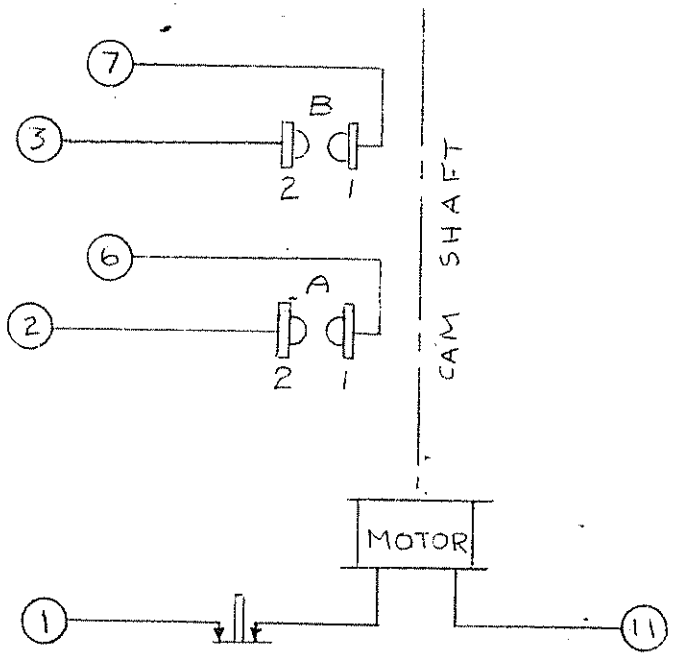

MOTOR RELEASE
NORMALLY CLOSED
PUSH BUTTON

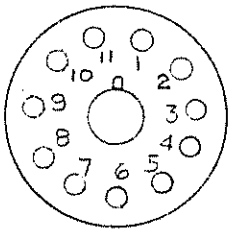

REVISIONS

TITLE 2-CIRCUIT SYNCHROLIZER A-17904

SKETCH BY	CLD	8-27-53
DRAWN BY	EB	8-27-53
APPROVED	[illegible]	[illegible]

BT-5100

CN164

"ALBANENE" No. 195L K&E CO., N.Y. REG. U.S. PAT. OFF.

AUTOMATIC SIGNAL DIVISION
EASTERN INDUSTRIES, INCORPORATED

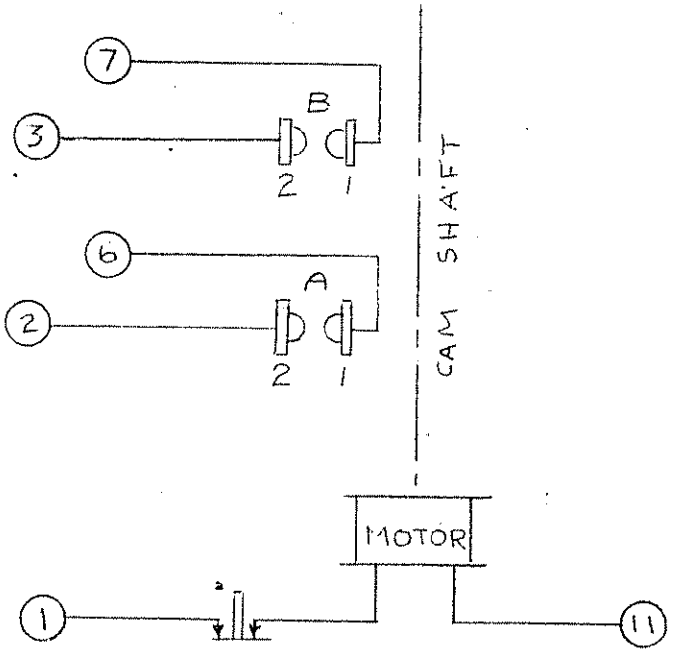

MOTOR RELEASE
NORMALLY CLOSED
PUSHBUTTON

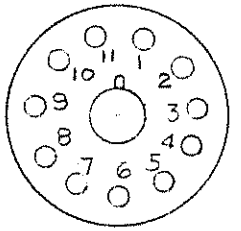

REVISIONS

TITLE 2-CIRCUIT SYNCHROLIZER A-17904

SKETCH BY	CLD	8-27-53
DRAWN BY	EB	8-27-53
APPROVED	[illegible]	8/28/53

BT-5100

CN164

"ALBANENE" No. 195L K&E CO., N.Y. REG. U.S. PAT. OFF.

AUTOMATIC SIGNAL DIVISION
EASTERN INDUSTRIES, INCORPORATED

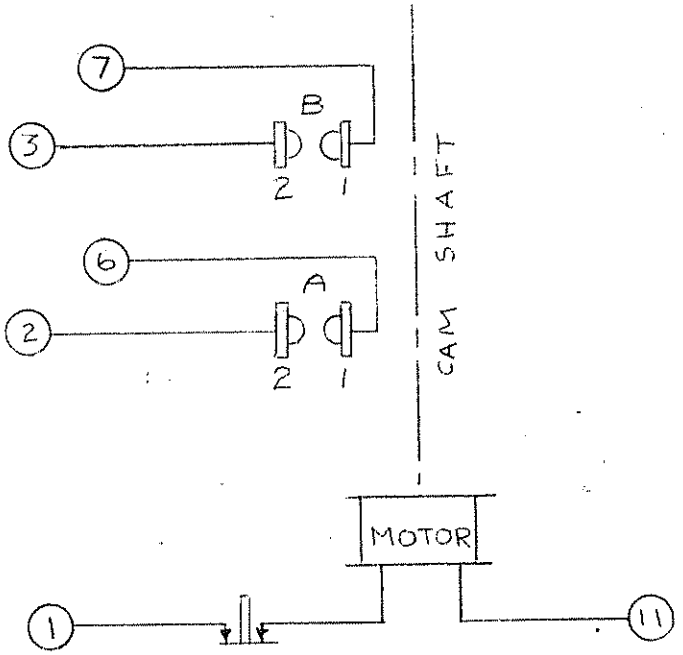

MOTOR RELEASE
NORMALLY CLOSED
PUSH BUTTON

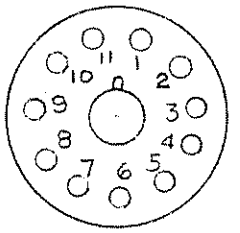

REVISIONS

TITLE 2-CIRCUIT SYNCHROLIZER A-17904	SKETCH BY	CLD	8-27-53
	DRAWN BY	EB	8-27-53
	APPROVED	[illegible]	[illegible]

BT-5100

CN164

"ALBANENE" No. 1051 K&E CO., N.Y.
REG. U.S. PAT. OFF.

AUTOMATIC SIGNAL DIVISION
EASTERN INDUSTRIES, INCORPORATED

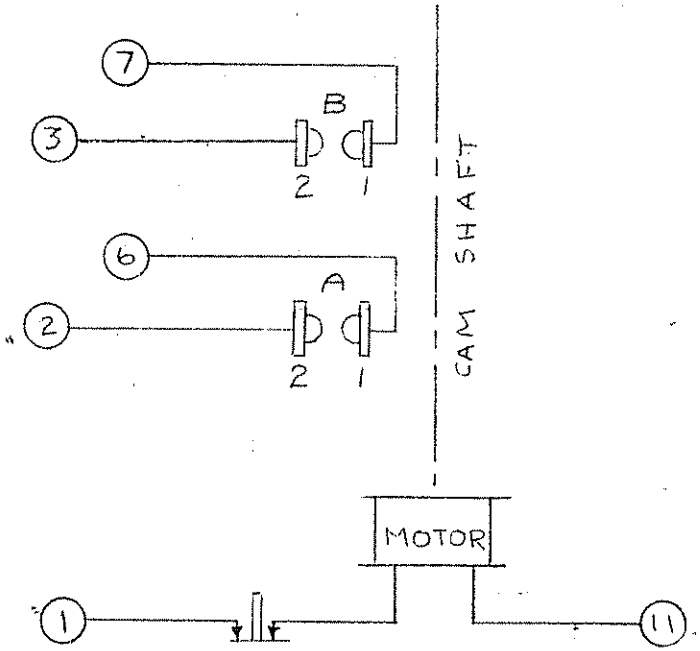

MOTOR RELEASE
NORMALLY CLOSED
PUSH BUTTON

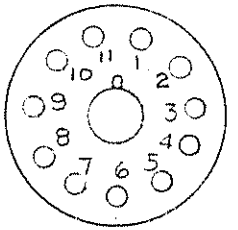

REVISIONS

TITLE 2-CIRCUIT SYNCHROLIZER A-17904

SKETCH BY	CLD	8-27-53
DRAWN BY	EB	8-27-53
APPROVED	[illegible]	[illegible]

BT-5100

CN164

"ALBANENE" No. 196L K&E CO., N.Y.
REG. U.S. PAT. OFF